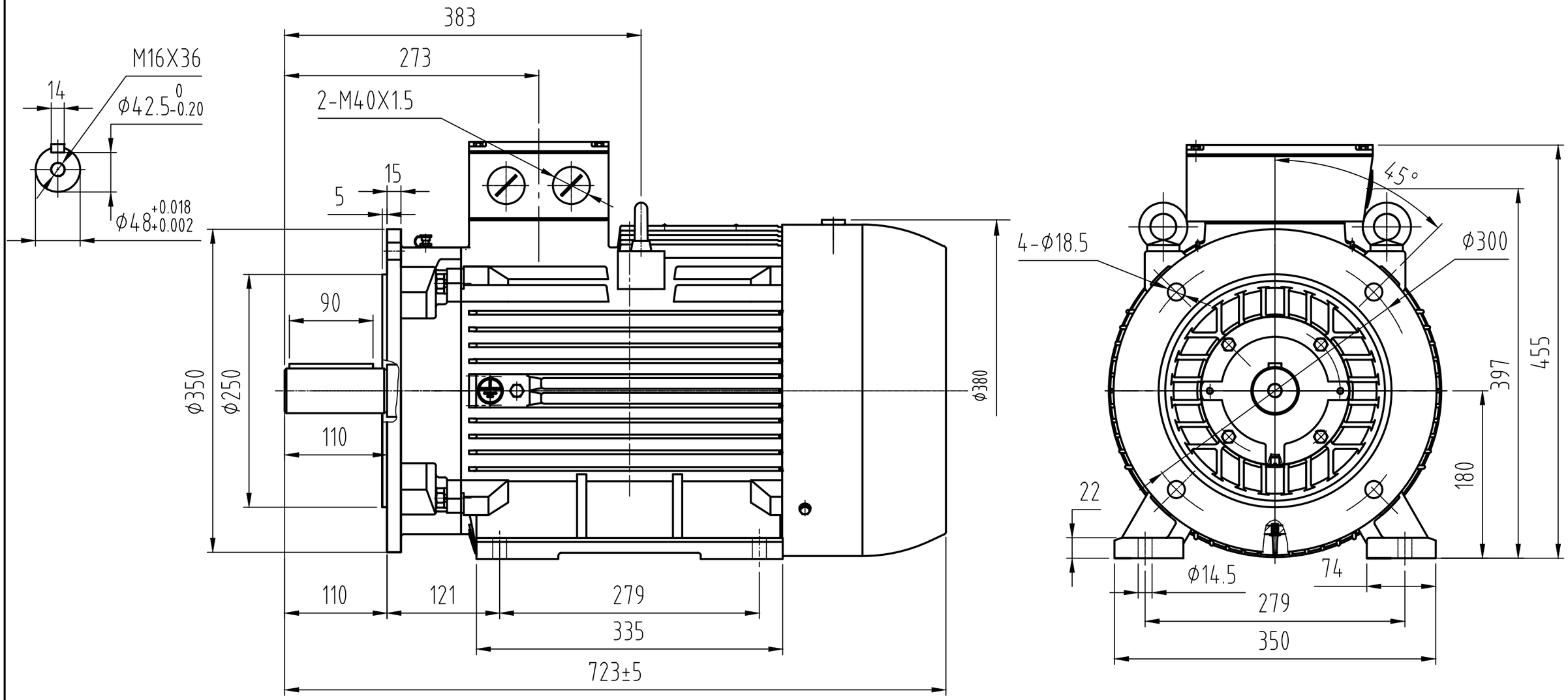

3L 180L-4-8 (B35) IE3	DATE	2015.2.4		CHK	JUDAPENG
	DRAWN	LIYAN		APPD	LUJUNHUA
DIMENSION OUTLINE	ISSUE A	DATE		CERTIFIED BY	
	ISSUE B	DATE		CERTIFIED BY	
	ISSUE C	DATE		CERTIFIED BY	
	ISSUE D	DATE		CERTIFIED BY	