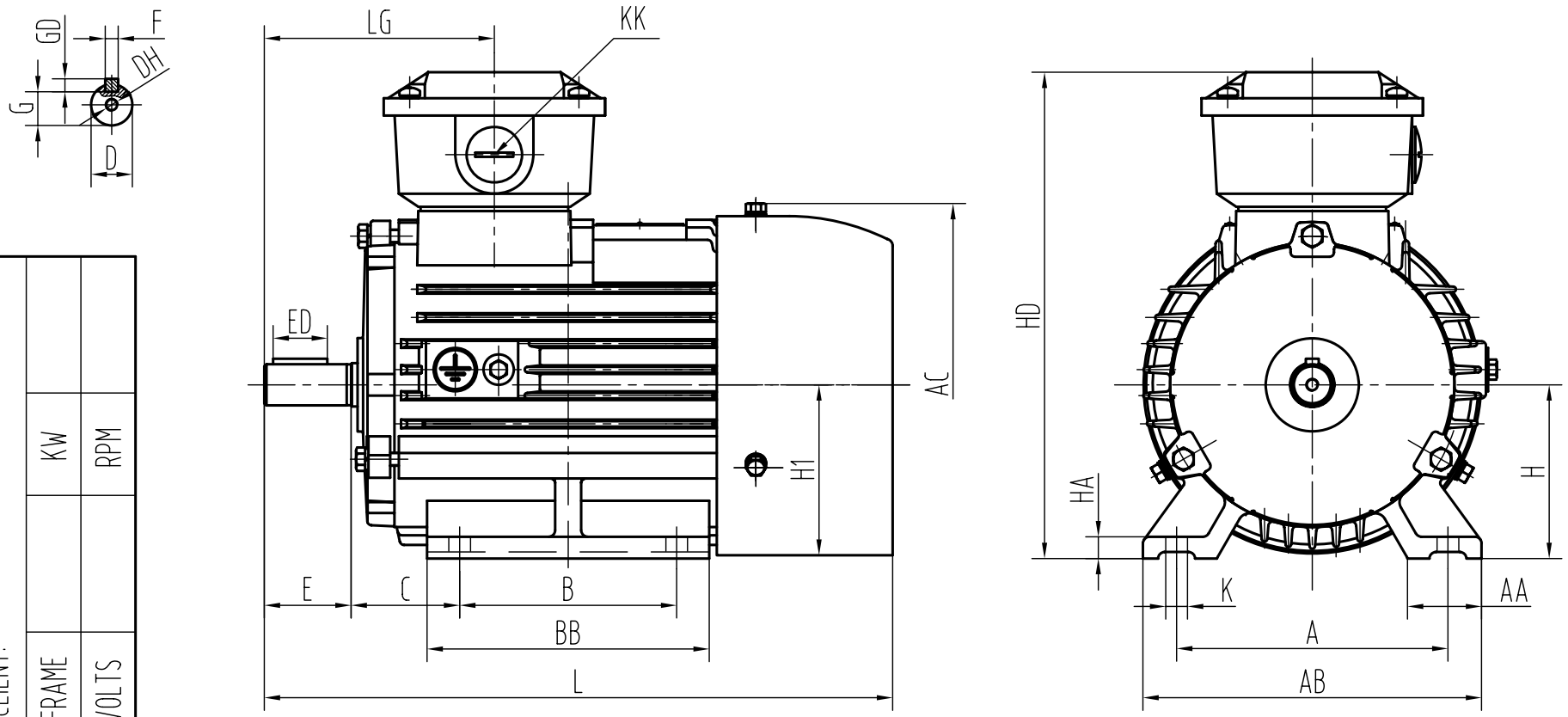

CLIENT:		
	KW	RPM
	FRAME	VOLTS

OUTLINE DIMENSIONS FOOT MOUNTED MOTORS																		SHAFT EXT.DE ONLY							WEIGHT
A	AA	AB	AC			B	BB	C	H	H1	HA	HD	K	KK	L	LG		D	DH	E	ED	F	G	GD	
125	34	160	175			100	142	50	80	78.5	10	230	10	M25X1.5	305	112		ϕ19	M6X16	40	25	6	15.5	6	

CUSTOMER APPROVAL _____ SIGNATURE _____ DATE

2L-80 2-8P (B3) DIMENSION OUTLINE	DATE	2011.5.8	CHK	
	DRAWN	Mao	APPD	
	ISSUE A DATE		CERTIFIED BY	
	ISSUE B DATE		CERTIFIED BY	
	ISSUE C DATE		CERTIFIED BY	
	ISSUE D DATE		CERTIFIED BY	