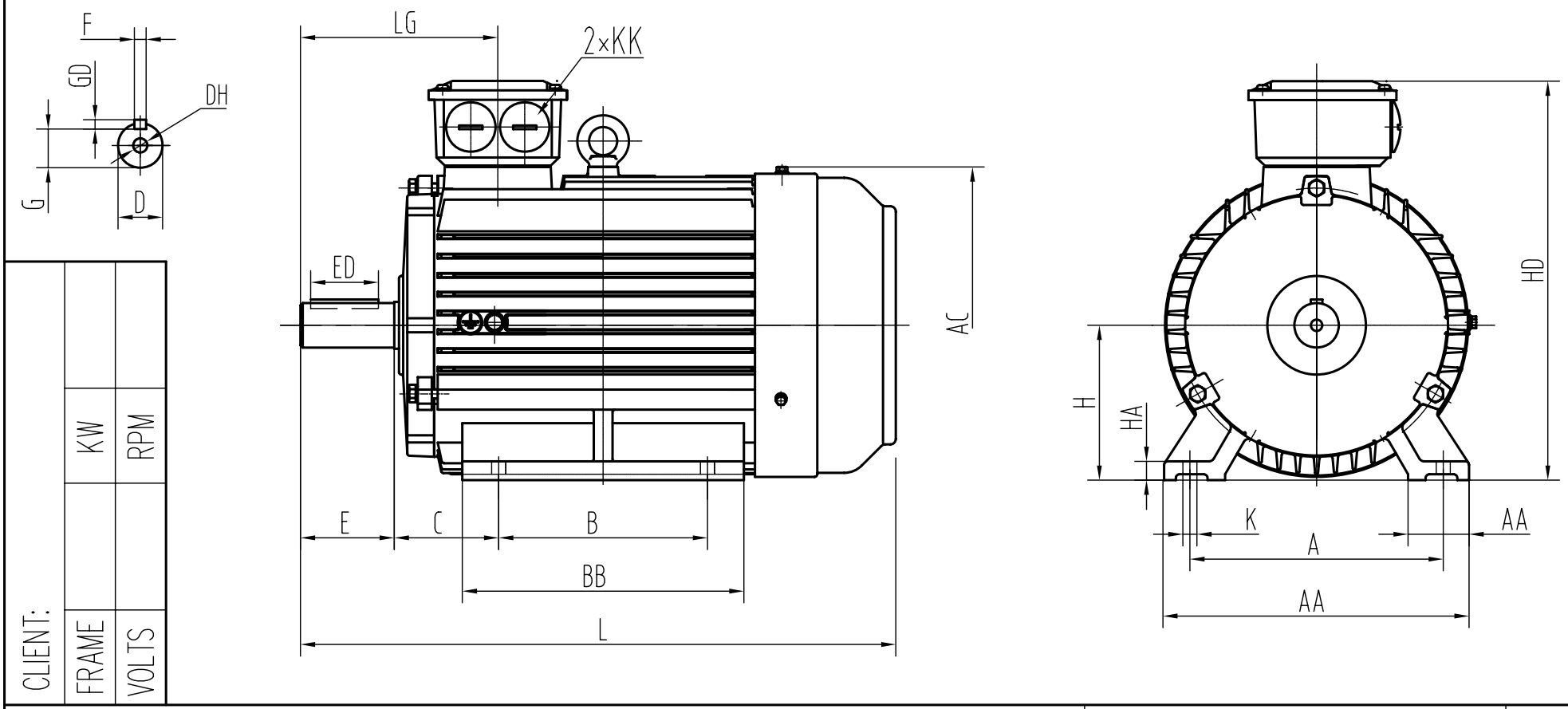

CLIENT:	KW	RPM
	FRAME	VOLTS

OUTLINE DIMENSIONS FOOT MOUNTED MOTORS																	SHAFT EXT.DE ONLY							WEIGHT
A	AA	AB	AC		B		BB		C	H	HA	HD	K	KK	L		LG	D	DB	E	ED	F	G	GD	
216	52	265	275		140(132S)	178(132M)	220(132S)	258(132M)	89	132	16	345	12	M32X1.5	510(132S)	550(132M)	167	38	M12X28	80	63	10	33	8	

CUSTOMER APPROVAL _____ SIGNATURE _____ DATE

2L-132 2-8P (B3) DIMENSION OUTLINE	DATE	2005.12.4	CHK	
	DRAWN	Huang	APPD	
	ISSUE A DATE		CERTIFIED BY	
	ISSUE B DATE		CERTIFIED BY	
	ISSUE C DATE		CERTIFIED BY	
	ISSUE D DATE		CERTIFIED BY	