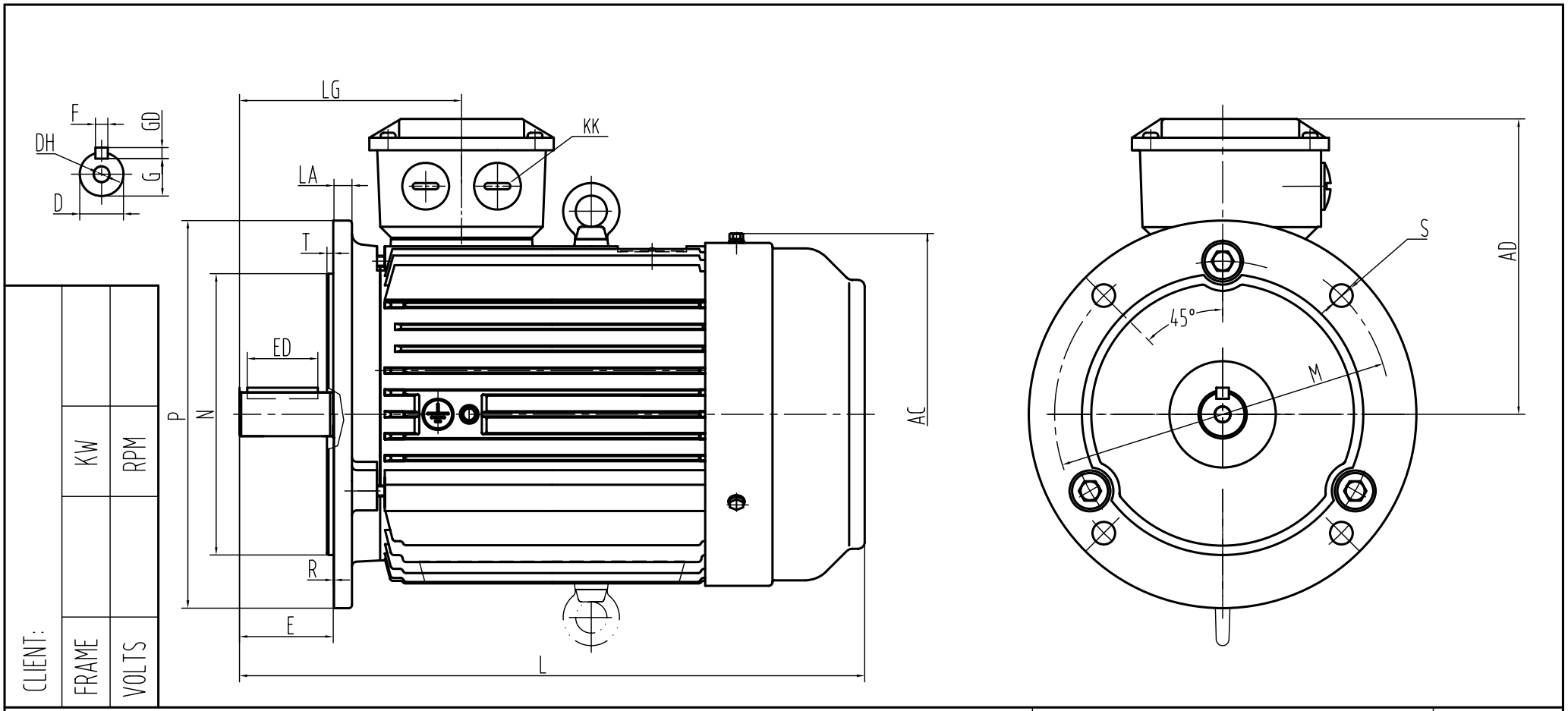

OUTLINE DIMENSIONS FLANGE MOUNTED MOTORS																		SHAFT EXT.DE ONLY							WEIGHT
AC	AD			KK	LG	L		LA	M	N	P	R	S	T				D	DH	E	ED	F	G	GD		
236	190			M32X1.5	144	480		14	215	180	250	0	14.5	4				28	M10X22	60	45	8	24	7	

CUSTOMER APPROVAL _____ SIGNATURE _____ DATE

2L-112 2-8P (B5 V1) DIMENSION OUTLINE	DATE		2005.12.6	CHK	
	DRAWN		Liu	APPD	
	ISSUE	A	DATE	CERTIFIED BY	
	ISSUE	B	DATE	CERTIFIED BY	
	ISSUE	C	DATE	CERTIFIED BY	
	ISSUE	D	DATE	CERTIFIED BY	