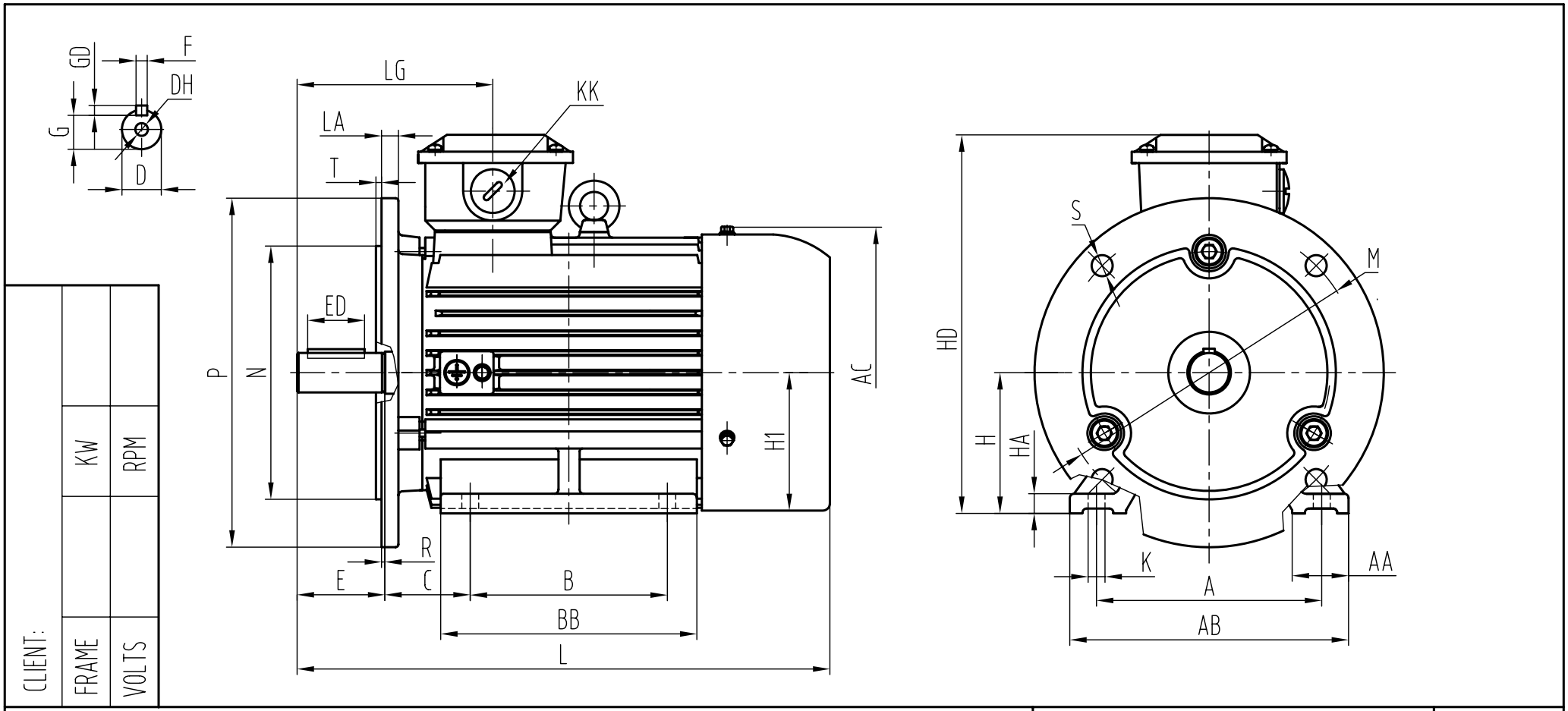

OUTLINE DIMENSIONS FOOT-FLANGE MOUNTED MOTORS																		SHAFT EXT.DE ONLY							WEIGHT(kg)
A	AA	AB	AC			B	BB	C	H	H1	HA	HD	K	KK	L	LG		D	DH	E	ED	F	G	GD	
160	40	200	215			140	235	63	100	98	14	275	12	M25X1.5	435	153		28	M10×22	60	45	8	24	7	

LA	R	M	N	P	S	T
14	0	215	180	250	14.5	4

CUSTOMER APPROVAL _____ SIGNATURE _____ DATE

2L-100 (B35)
DIMENSION OUTLINE

DATE			2005.12.5	CHK	
DRAWN			Liang	APPD	
ISSUE	A	DATE		CERTIFIED BY	
ISSUE	B	DATE		CERTIFIED BY	
ISSUE	C	DATE		CERTIFIED BY	
ISSUE	D	DATE		CERTIFIED BY	